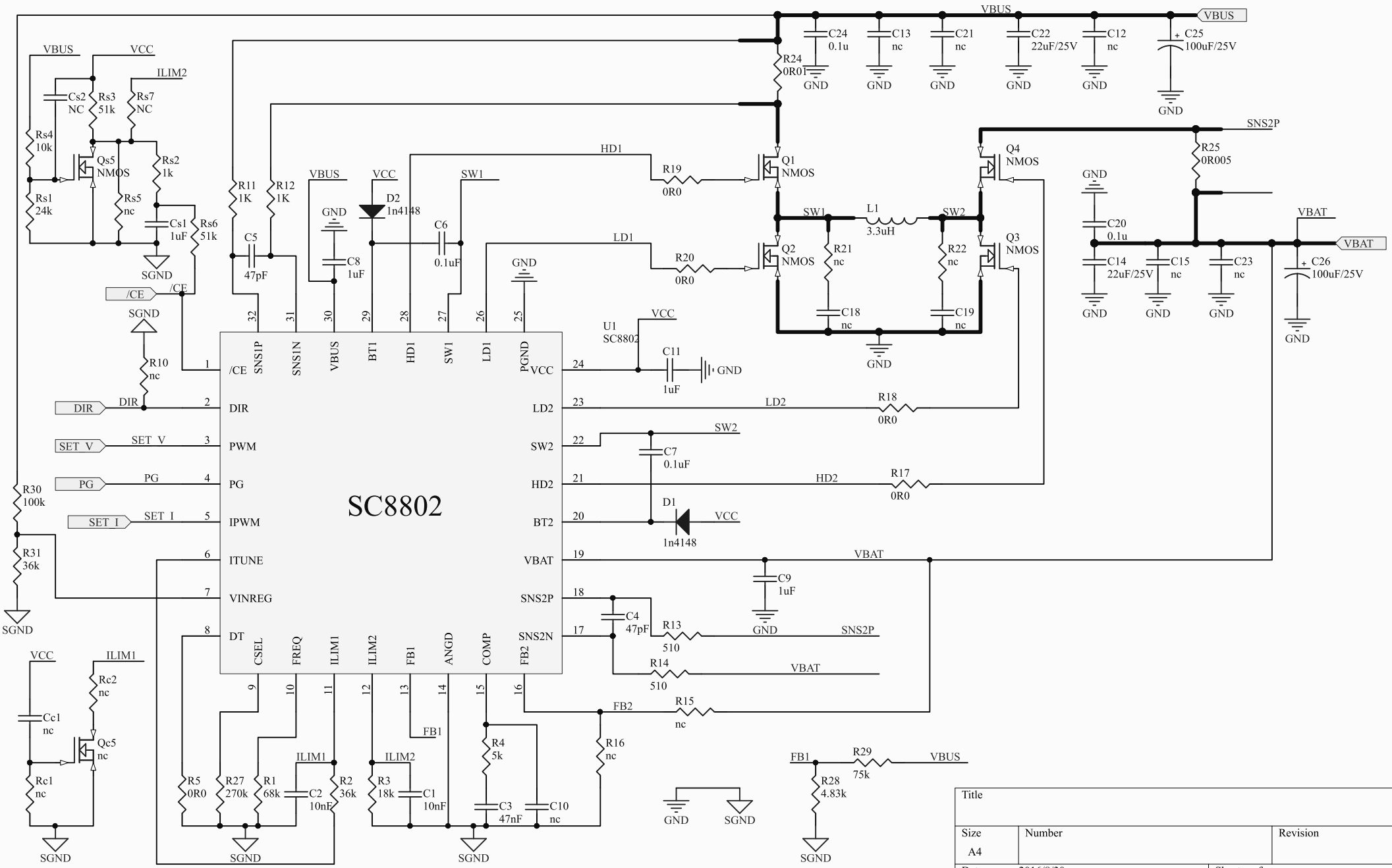
SC8802
U1
SC8802
VBUS
VCC
VBAT
SNS2P
SW1
SW2
HD1
LD1
HD2
LD2
FB1
FB2
ILIM1
ILIM2
/CE
DIR
SET_V
PG
SET_I
SGND
GND
Q1 NMOS
Q2 NMOS
Q3 NMOS
Q4 NMOS
Qs5 NMOS
Qc5 nc
D1 1n4148
D2 1n4148
L1 3.3uH
R24 0R01
R25 0R005
R19 0R0
R20 0R0
R17 0R0
R18 0R0
R13 510
R14 510
R15 nc
R16 nc
R29 75k
R28 4.83k
C24 0.1u
C13 nc
C21 nc
C22 22uF/25V
C12 nc
C25 100uF/25V
C20 0.1u
C14 22uF/25V
C15 nc
C23 nc
C26 100uF/25V
C18 nc
C19 nc
C11 1uF
C7 0.1uF
C9 1uF
C4 47pF
C5 47pF
C6 0.1uF
C8 1uF
C1 10nF
C2 10nF
C3 47nF
C10 nc
R1 68k
R2 36k
R3 18k
R4 5k
R5 0R0
R27 270k
R10 nc
R11 1K
R12 1K
R21 nc
R22 nc
R30 100k
R31 36k
Rs1 24k
Rs2 1k
Rs3 51k
Rs4 10k
Rs5 nc
Rs6 51k
Rs7 NC
Cs1 1uF
Cs2 NC
Rc1 nc
Rc2 nc
Cc1 nc
Title
Size
A4
Number
Revision
Date: 2016/8/30
Sheet of
File: C:\Users\...\C Powerbank V1.1 SC8802 160830.SchDoc

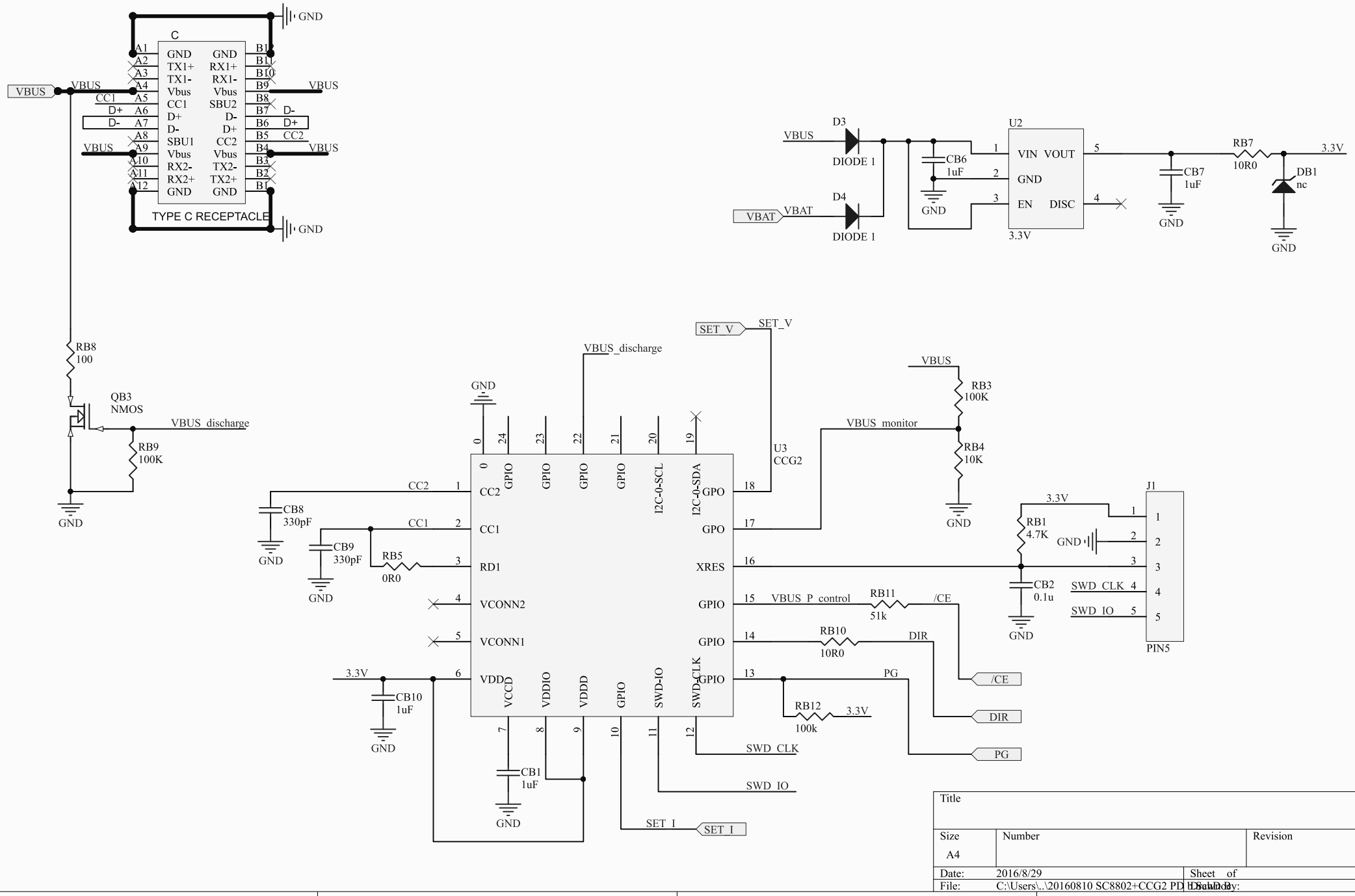

Title		
Size A4	Number	Revision
Date: 2016/8/29		Sheet of
File: C:\Users\..\20160810 SC8802+CCG2 PD		Drawn By: